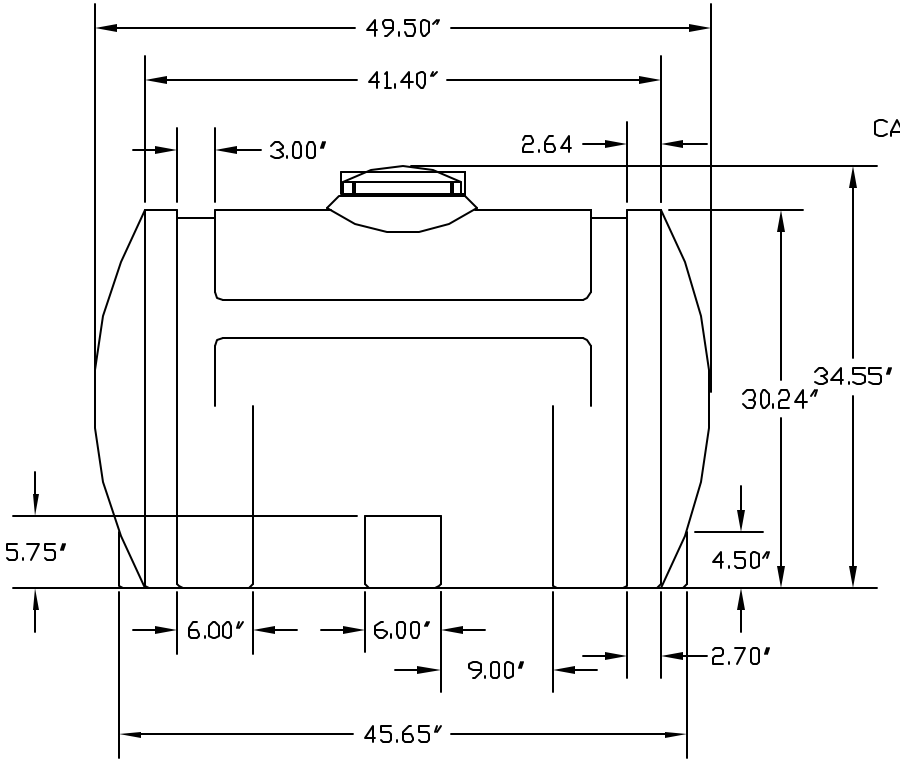

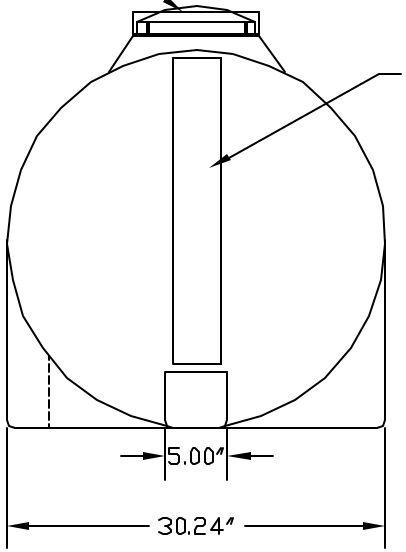

PART OR DWG. NO.	REV.
HLT00125A	

NOTES

1. LINEAR POLYETHYLENE, NATURAL TRANSLUCENT WHITE.

		FITTINGS		
MK	SIZE	DESCRIPTION	ELEV.	DEG.

SCALE	TOLERANCE	REV.LTR

MATERIAL: SEE NOTES

DRAWN	DAY	NO.	YR.	RELEASED	SHEET NO.
CSS	05	02	03		

TERRACON CORPORATION
8 BOYNTON ROAD
HOPPING BROOK PARK
HOLLISTON, MA 01748 USA

PART OR DWG. NO.: HLT00125A

TITLE: HLT00125A 125 GAL.LEG TK

REV.