PART OR DWG. NO.	REV.
HLT00125A	

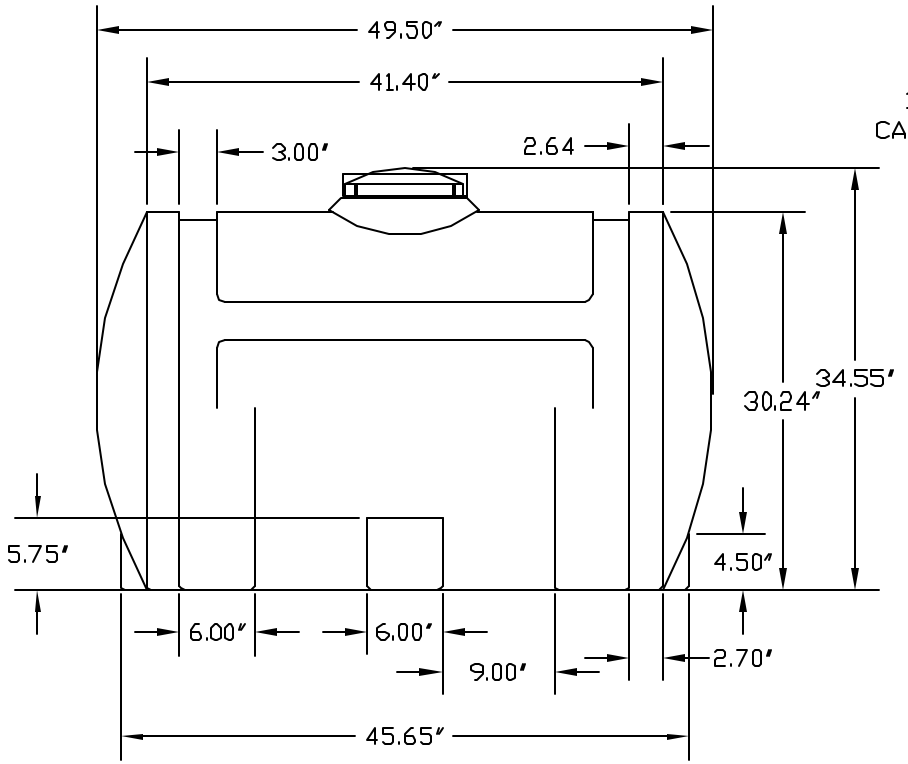

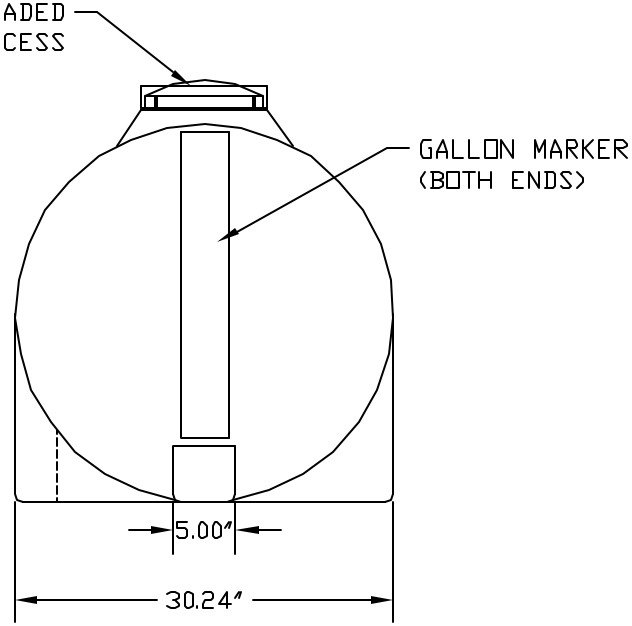

		FITTINGS		
MK	SIZE	DESCRIPTION	ELEV.	DES.

NOTES

1. LINEAR POLYETHYLENE, NATURAL TRANSLUCENT WHITE.

SCALE	TOLERANCE	REV.LTR
MATERIAL: SEE NOTES		

DRAWN	DAY	MO.	YR.	RELEASED	SHEET NO.
CSS	05	02	03		

TERRACON CORPORATION
8 BOYNTON ROAD
HOPPINS BROOK PARK
HOLLISTON, MA 01748 USA

PART OR DWG. NO.: HLT00125A

TITLE: HLT00125A 125 GAL.LEG TK

REV.