| PART OR DWG. NO. | REV. |
|---|---|
| HLT00060A | |

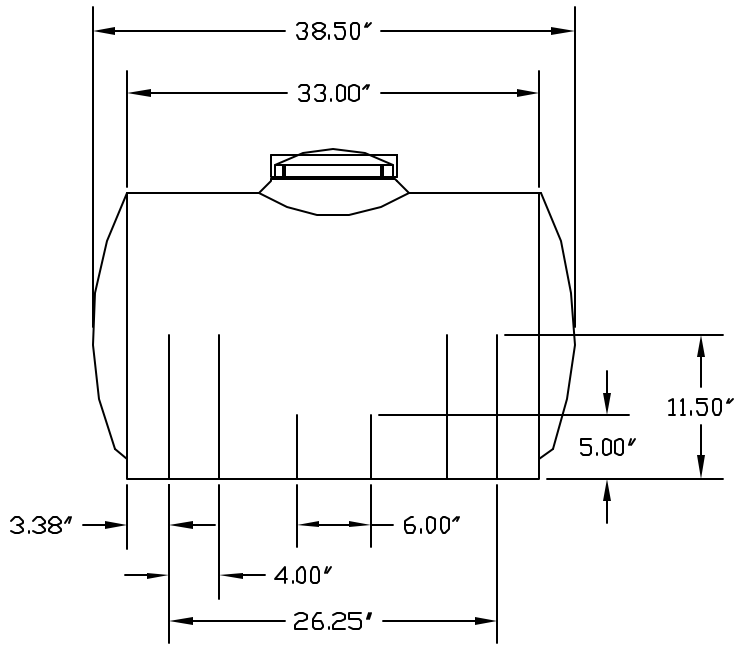


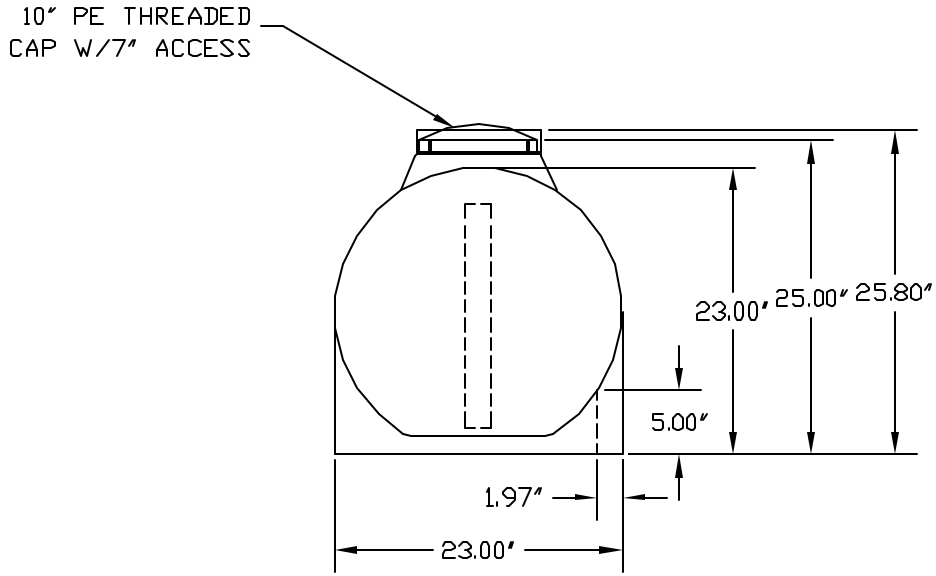


NOTES

1. 1/4" WALL LINEAR POLY-ETHYLENE, NATURAL TRANSLUCENT WHITE.

| SCALE 1 : 10 | TOLERANCE | REV.LTR |
|---|---|---|
| MATERIAL SEE NOTES | | PART OR DWG. NO. HLT00060A |

| DRAWN | DAY | MO. | YR. | RELEASED | SHEET NO. |
|---|---|---|---|---|---|
| CSS | 05 | 1 | 03 | | |

TERRACON CORPORATION
8 BOYNTON ROAD
HOPPING BROOK PARK
HOLLISTON, MA 01748 USA

TITLE: HLTD0060A 60 GAL. LEG TANK

REV.