PART OR DWG. NO.	REV.
HLT00030A	

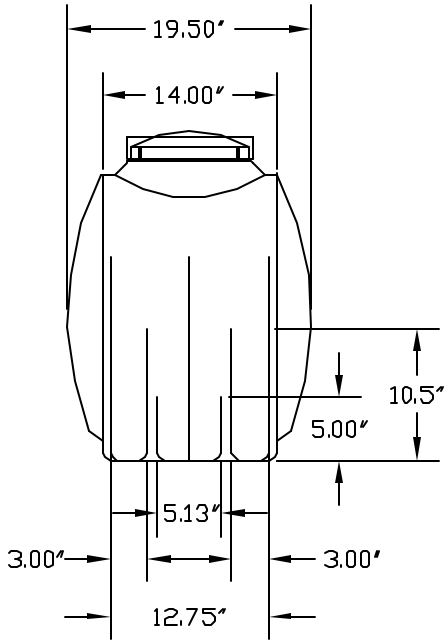

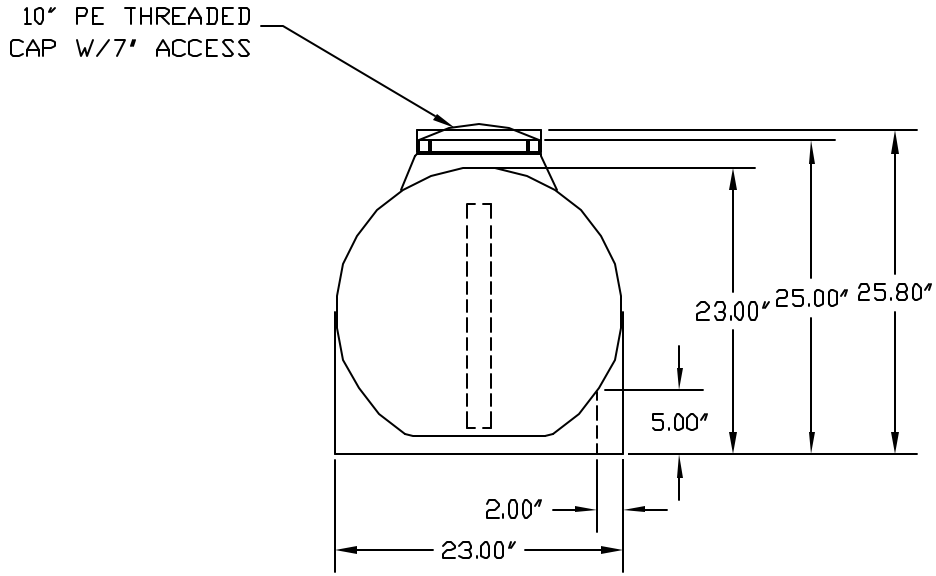

NOTES

1. 1/4" WALL LINEAR POLY-ETHYLENE, NATURAL TRANSLUCENT WHITE.

SCALE 1 : 10	TOLERANCE	REV.LTR
MATERIAL SEE NOTES		PART OR DWG. NO. HLT00030A

DRAWN	DAY	MO.	YR.	RELEASED	SHEET NO.
CSS	05	1	03		

TERRACON CORPORATION
8 BOYNTON ROAD
HOPPING BROOK PARK
HOLLISTON, MA 01748 USA

TITLE: HLTD0030A 30 GAL. LEG TANK

REV.