REVISIONS			
REV.	DESCRIPTION	DATE	BY
A	CXF00375A	3/2/08	MDC

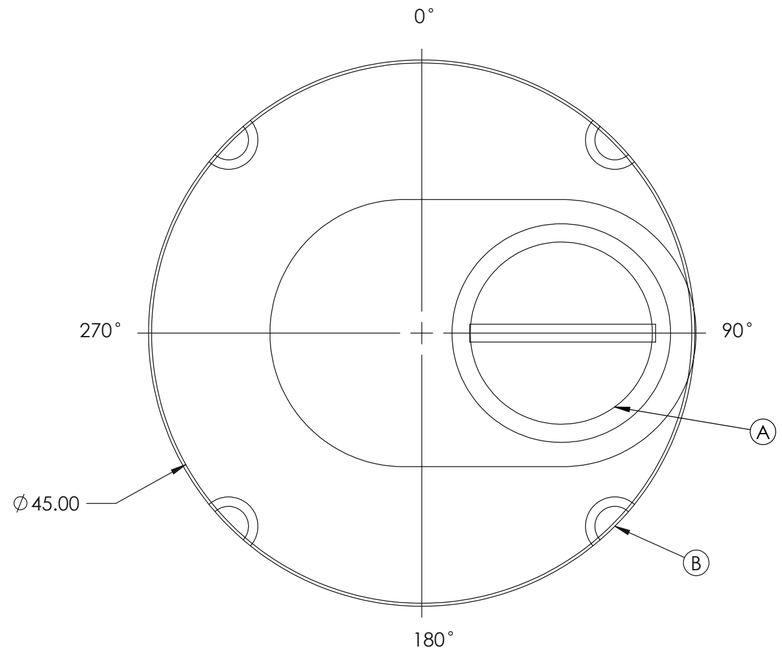

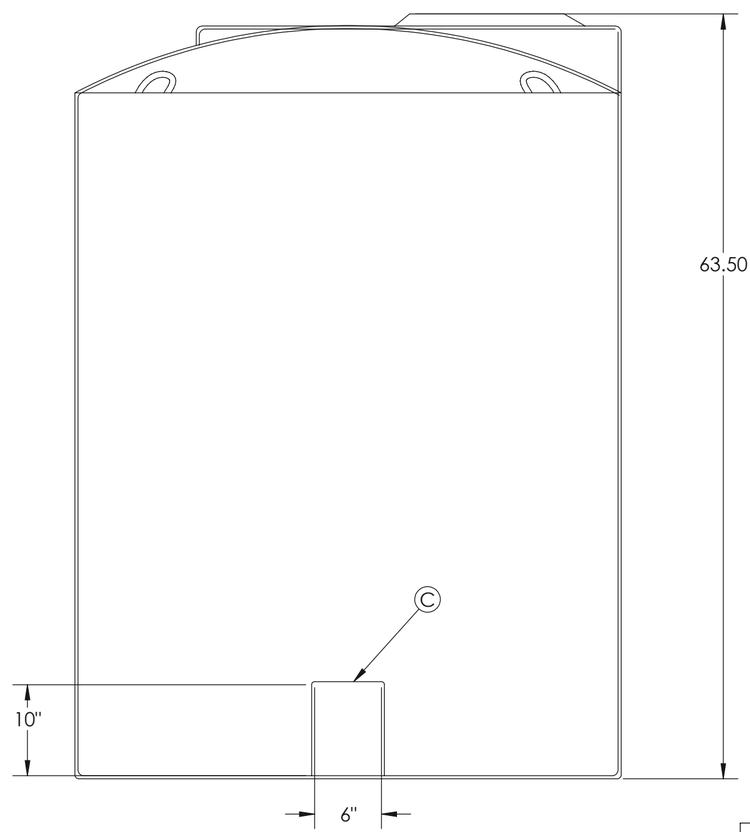

NOTES:

A. 18" THREADED MANWAY WITH 15" ACCEESS
B. MOLDED LIFTING LUG, 4 PLACES TYPICAL
C. MOLDED FITTING FLAT

Terracon Corporation
5 Boynton Road
Holliston, MA 01746
Tel: 508-429-9950 Fax: 508-429-8737
email: purchasing@terracontanks.com
web: http//www.terracontanks.com

QTY	ITEM	PART NO.	DESCRIPTION

UNLESS OTHERWISE SPECIFIED:
DIMENSIONS ARE IN INCHES
TOLERANCES: ± 3 %

MATERIAL: SEE NOTES
FINISH: SEE NOTES
DO NOT SCALE DRAWING

	NAME	DATE
DRAWN BY:	MDC	3/2/08

COMMENTS:

TITLE:
CXF00375A

SIZE	DWG. NO.	REV
C		

SCALE: NTS | SHEET 1 OF 1

CUSTOMER APPROVAL: _____ DATE: _____

IMPORTANT
This document is the property of, and subject to recall by,
TERRACON CORPORATION.
As such, it is proprietary in general and in detail. It shall not be copied, nor shall its contents be revealed to outside parties without written consent from
TERRACON CORPORATION.